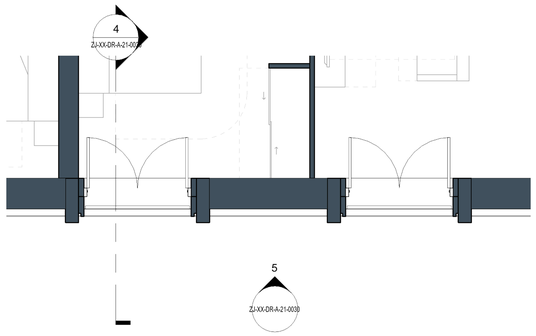

3 Upper Floor Plan
Scale 1 : 50

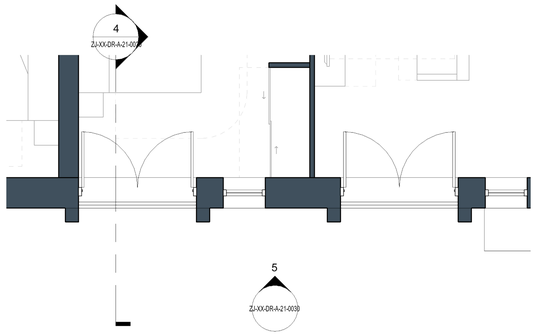

2 Typical Floor Plan
Scale 1 : 50

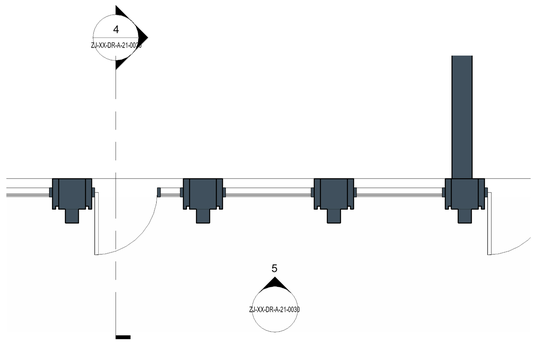

1 Ground Floor Plan
Scale 1 : 50

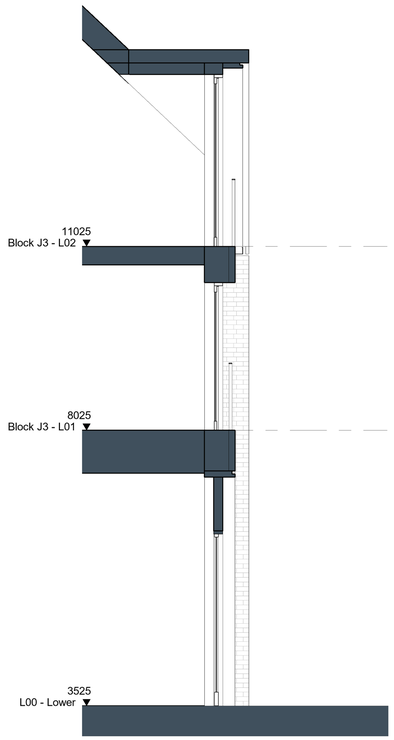

4 Typical Section
Scale 1 : 50

5 Typical Elevation
Scale 1 : 50

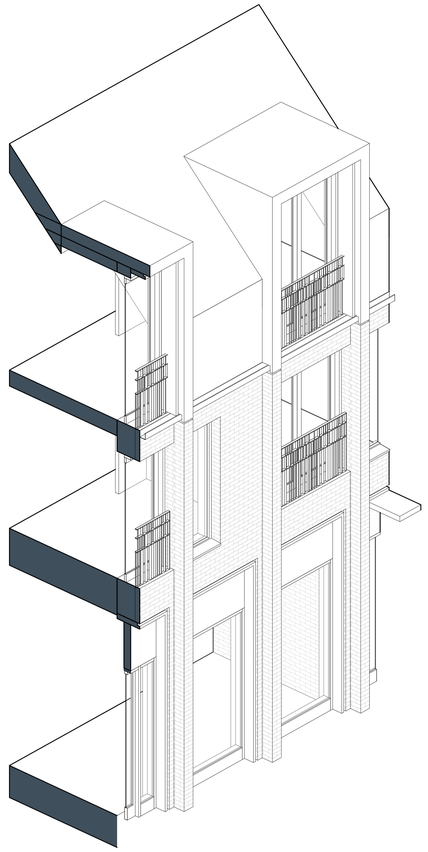

6 3D Axonometric
Scale

Contractors and consultants are not to scale dimensions from this drawing

Reproduced by permission of Ordnance Survey on behalf of HMSO © CROWN COPYRIGHT and database right 2008 All rights reserved Ordnance Survey Licence number AL 1000 22432 Broadway Malyan Limited

The survey information shown on this drawing is based on a topographical survey prepared by a third party and Broadway Malyan Limited accept no responsibility for the accuracy or completeness of the survey.

Drawings to be read in conjunction with the associated Design & Access Statement, associated consultant desin team documents & reports and landscape information

Landscape shown is for illustrative purposes only. For detailed landscape information, please refer to the landscape information & documents.

0m 2.5m 5m

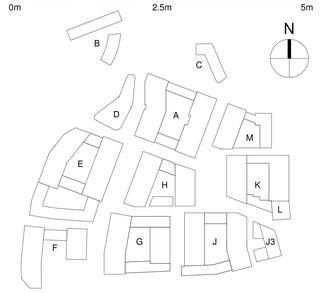

Materials Key

1	**Brickwork Finish**
1.1	Red Brick
1.2	Red Brick Soldier Course
1.3	Dark Red Brick
1.4	Dark Red Brick Soldier Course
1.5	White Brick - Light Mortar
1.6	White Brick Soldier Course - Light Mortar
1.7	Grey Brick - Dark Mortar
1.8	Light Grey Brick
1.9	Light Grey Brick Soldier Course
1.10	Black Brick - Matching Mortar
1.11	Dark Grey Brick - Light Mortar
1.12	Dark Grey Brick Soldier Course - Light Mortar
1.13	Dark Grey Brick - Dark Mortar
1.14	Dark Grey Brick Soldier Course - Dark Mortar
1.20	Textured Brickwork
1.21	Inset Brickwork
2	**Metal Work / Window Framing Finish**
2.1	Black
2.2	Brown
2.3	White
2.4	Dark Grey
2.5	Dark Brown
2.6	Salmon
2.7	Yellow
2.8	Green
2.9	Blue
2.20	Perforated Metal
2.21	Louvre
3	**Roof Finish**
3.1	Brown Roof Tile
3.2	Grey Roof Tile
3.3	Dark Grey Roof Tile

Revision	Date	Drawn By	Description
D0-2	15.07.22		Issued For Planning
D0-1	31.03.22		Issued for Planning

Weston Homes

p·ie

BroadwayMalyan BM

4 Pear Place
London
SE1 8BT

T: +44 (0)20 7261 4200
F: +44 (0)20 7261 4300
E: Lon@BroadwayMalyan.com

www.BroadwayMalyan.com

Client
Weston Homes

Project
Anglia Square
Norwich

Description
Bay Study
Block J3 - East
Magdalen Street

Status
For Planning

Scale	Drawn By	Date
1:50@A1	AB	31.03.22
Job Number	**Drawing Number**	**Revision**
35301	ZJ-XX-DR-A-21-0010	D0-2

Original size 100mm @ A1 Copyright Broadway Malyan Limited